151023 - D4

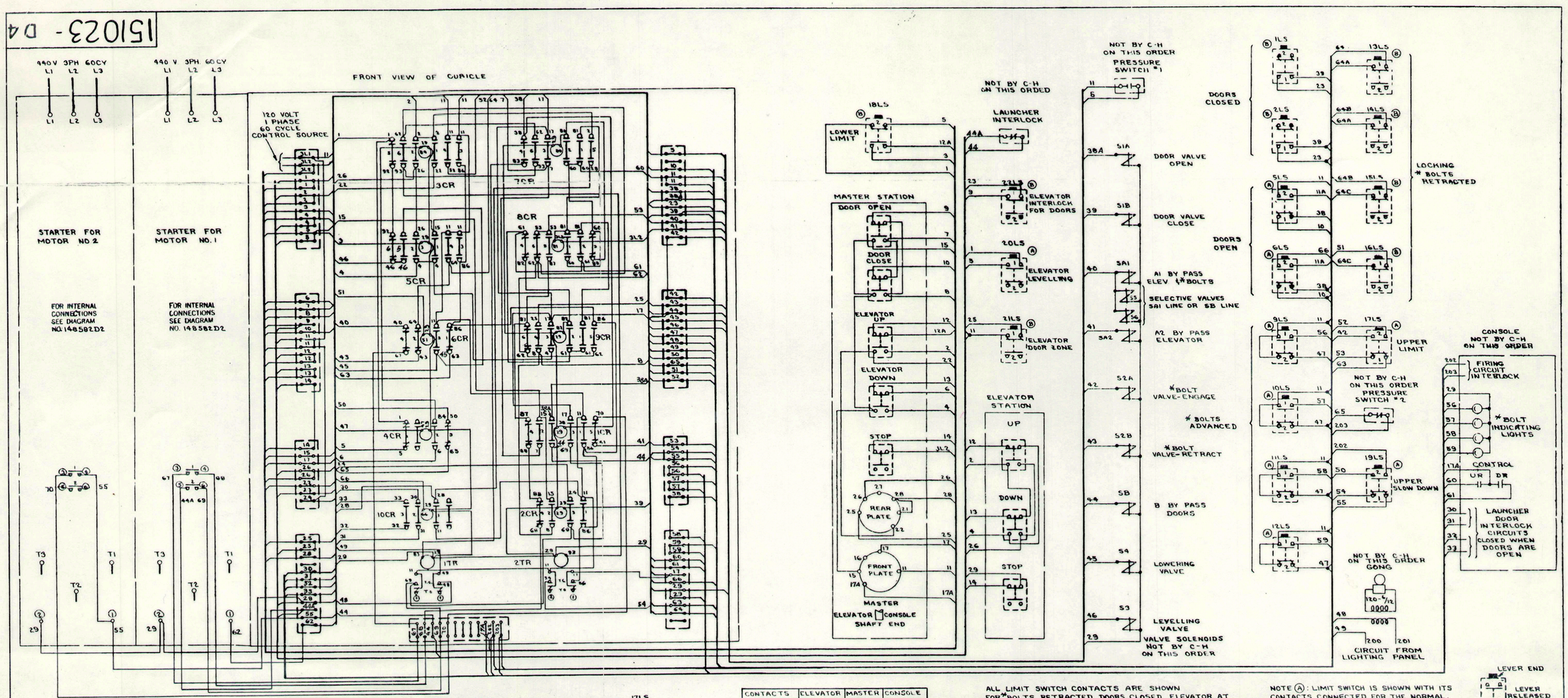

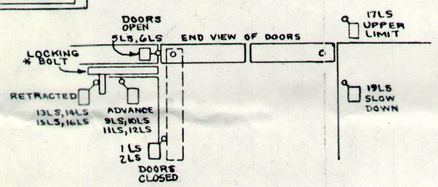

CONTACTS	ELEVATOR	MASTER	CONSOLE
11 - 15		X	
11 - 16	⊗		
11 - 17			X
21-27-28			⊗
21-26-28	X		
21-22-25-28		X	
11-17A			X

X = CONTACT CLOSED
⊗ = CONTACT CLOSED, NOT USED

ALL LIMIT SWITCH CONTACTS ARE SHOWN FOR *BOLTS RETRACTED, DOORS CLOSED, ELEVATOR AT LOW LEVEL RESTING ON PEDESTALS AND LAUNCHER HORIZONTAL.
ALL LIMIT SWITCHES ARE IDENTICAL AND INTERCHANGABLE. THE OPERATION LEVERS CAN ALL BE ADJUSTED TO SUIT ANY LOCATION.

PRESSURE SWITCHES ARE SHOWN FOR ZERO PRESSURE.

NOTE (A): LIMIT SWITCH IS SHOWN WITH ITS CONTACTS CONNECTED FOR THE NORMAL, RELEASED, UNOPERATED, POSITION.

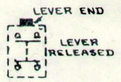

NOTE (B): LIMIT SWITCH IS SHOWN WITH ITS CONTACTS CONNECTED FOR THE ROLLER LEVER DEPRESSED CONDITION AS WHEN LIMIT SWITCH HAS BEEN ACTUATED BY ITS CAM.

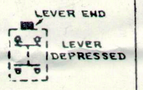

NOTE:
*BOLTS MEANS LOCKING BAR

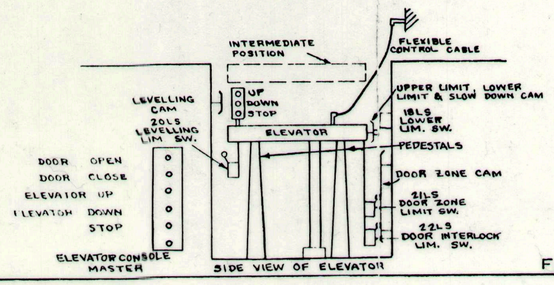

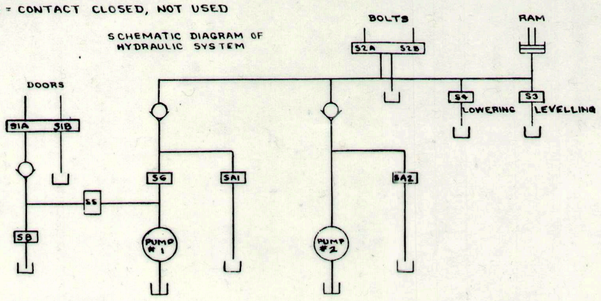

T.C. = TIMED CLOSING
T.O. = TIMED OPENING

LINE DIAGRAM 151022-D3

CONNECTIONS FOR AAA MAGAZINE HYDRAULIC ELEVATOR & DOOR CONTROLLER RELAY PANEL

FIG. 47

PREPARED BY
CUTLER-HAMMER INC.
FOR
THE WAYNE PUMP COMPANY
FORT WAYNE, INDIANA